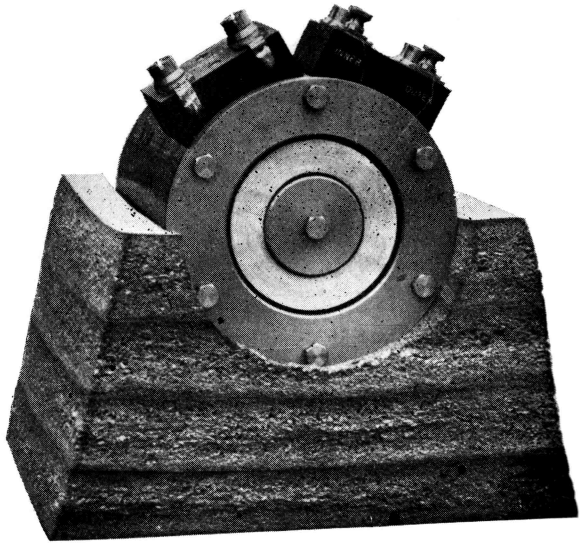

Fig. 1. The Magnetophone supported on its cushion of sponge rubber.

THE MARCONI-SYKES MAGNETOPHONE

A DESCRIPTION OF THE EQUIPMENT WITH DETAILS OF THE AMPLIFIERS.

This article, specially written for the *Wireless World and Radio Review* by Captain Round, gives for the first time a detailed description of the microphone and associated equipment which is used extensively not only for broadcasting stations but also for public speech amplifying, distributing and amplifying band music, etc.

By CAPT. H. J. ROUND, M.I.E.E.

THE advent of broadcast in England gave a stimulus to the production of high quality microphones and amplifiers for use in conjunction with them, and from the system, as a side issue, was evolved a high power loud speaker equipment to work either directly from these microphones and amplifiers or from gramophones or wireless.

The rights to manufacture, under the patent of Mr. A. S. Sykes, magnetophones of his type, was acquired, and after very considerable research a practical instrument was obtained which is in use in a great number of broadcast stations, and is also employed for public speech amplifying, amplifying of bands, or their transmission to other places, etc.

The magnetophone consists essentially of a cylindrical iron pot with a central core and a carefully arranged system of pole tips in between which is suspended an extremely light coil of aluminium wire supported on a backing of paper. This coil may be suspended in position in several ways.

One method which is not illustrated here is a trifilian suspension of silk thread, the thread being supported on sponge rubber pieces fixed in slots on the pole pieces.

The method illustrated consists in cotton-wool pads fixed with rubber solution to

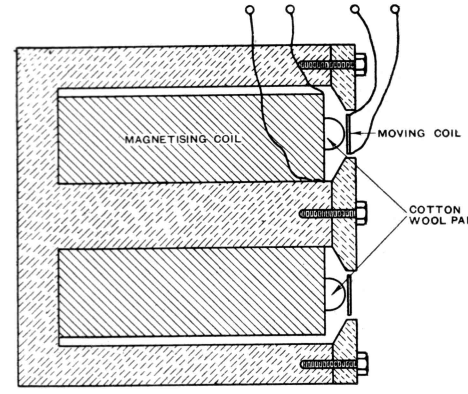

Fig. 2. A Section through the Magnetophone showing details of construction.

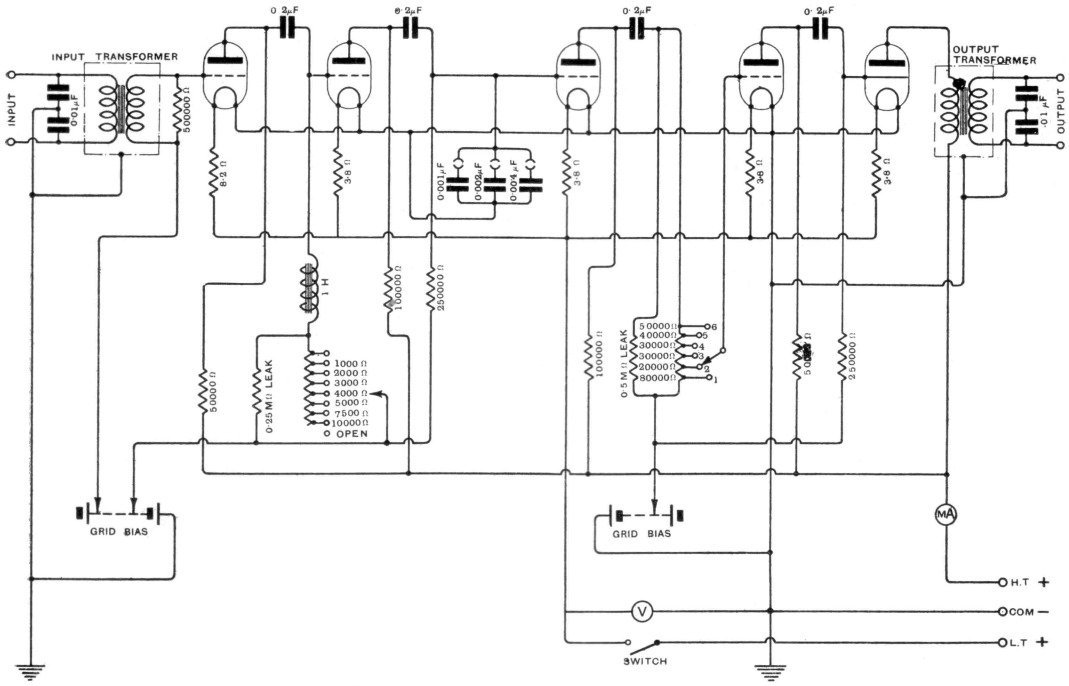

Fig. 3. Circuit diagram of the " A " amplifier.

the magnetising coil, whilst the moving coil is also fixed to these pads with rubber solution (Fig. 1).

Fig. 2 is a section through the whole instrument illustrating the arrangement of the magnetising coil. The coil normally takes 4 amperes at 8 volts and the flux density is about 1,500 lines to the centimetre. The case of the magnetophone is damped by a special arrangement to prevent it from vibrating as a bell.

The coil, which usually has a resistance of about 40 ohms, can be connected to well shielded lines up to half a mile in

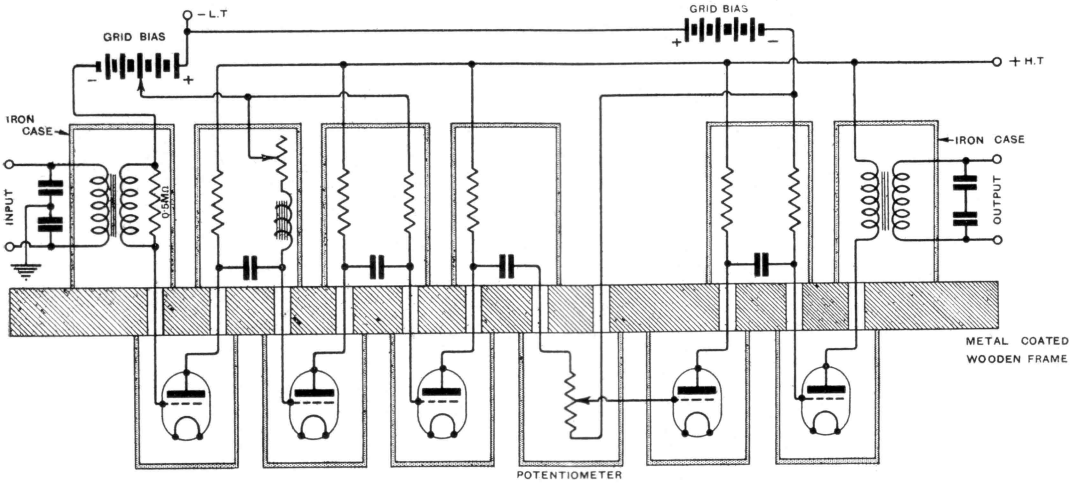

Fig. 4. Partial diagram of connections of the " A " amplifier illustrating the system of shielding.

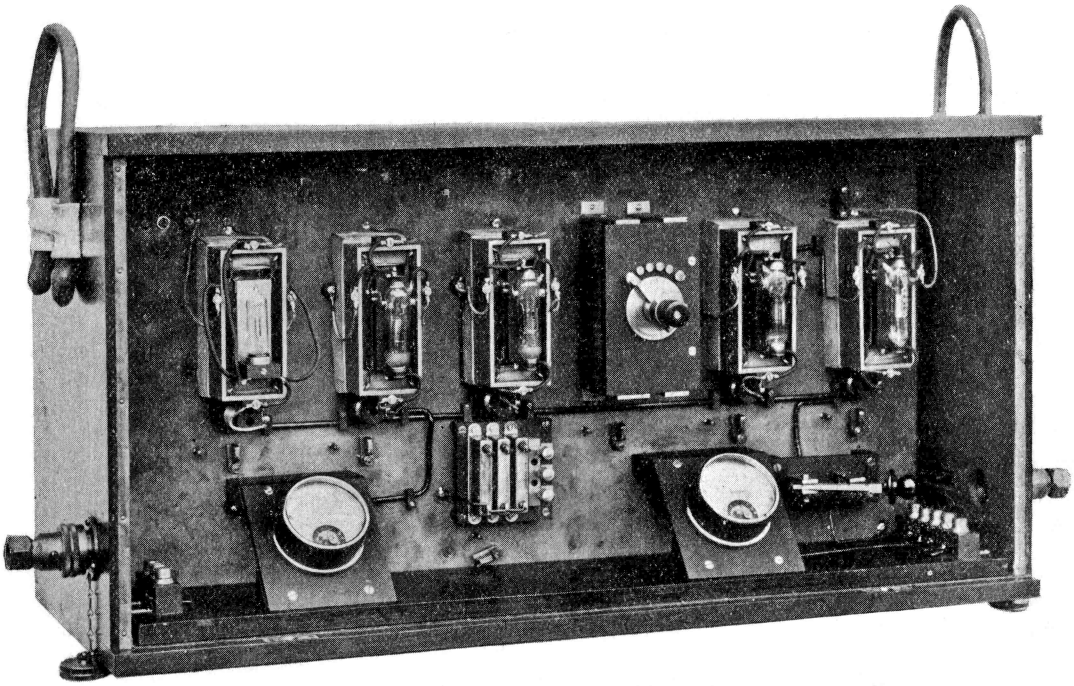

Fig. 5. A front view of the "A" amplifier with the covers removed.

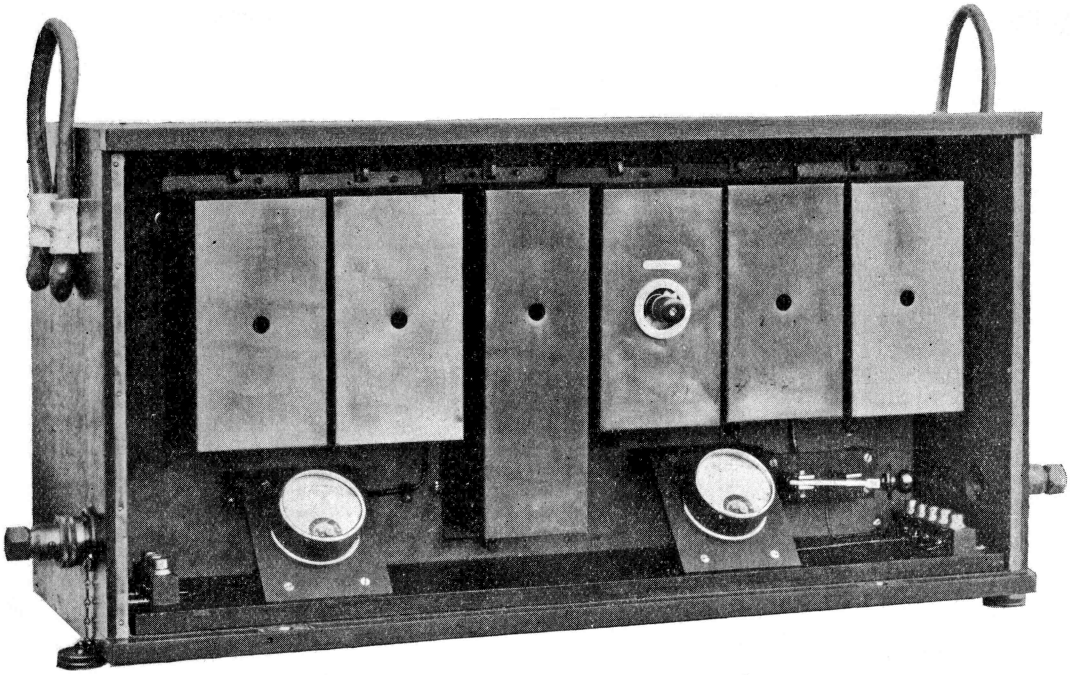

Fig. 6. The "A" amplifier (front) closed.

length and then to the "A" amplifier, but on account of induction it is preferable to keep the "A" amplifier within about 100 ft. of the magnetophone.

The magnetophone line is connected directly to a transformer of the "Ideal" type, and the resistance of the magnetophone coil is arranged so as to give the necessary damping to the resonant secondary of this transformer, just as the valve connected to the primary of an "Ideal" intervalve transformer gives the damping to the secondary (see Figs. 3 and 4).

The "A" amplifier consists of a five-resistance stage amplifier, which is seldom used all out, and a coarse potentiometer is arranged and set before any broadcast is put on so that no sounds likely to be produced can "blast" the amplifier. (The term "blast" is used to express the idea of carrying any part of the apparatus seriously beyond its linear limits.) The strength of signal at the end of the amplifier is ample to put over quite long telephone lines without induction trouble.

The amplifier has, of course, transformers for input and output, but the remainder is resistance coupled with two correcting arrangements. The first valve has a 1-henry inductance in its plate circuit, with a variable resistance in series up to 12,000 ohms (see Fig. 3). This gives a tone adjustment, in that decreasing this resistance steadily increases the ratio of high tone to low.

Across the second valve plate resistance is a variable condenser, variable in steps up to 0.007 mfds. This enables the high tones to be reduced in ratio to the low tones. These adjustments enable one to balance to some extent the sounds in different types of broadcast, for instance, in the studio little alterations from the normal straight magnification may be needed, but in a hall with a deep-toned resonance it may be advantageous to sacrifice some of the lower tones. Or, again, a land line may have a strong tone lowering effect, and this may be counteracted to some extent. A shunt condenser is always advisable, serving to reduce to some extent very high frequencies which are musically useless and "blast" the transmitter seriously. Handbells are particular examples which should be very carefully shunted as the harmonics are very violent. Gramophone records can be considerably improved by heavily shunting with capacity.

The "A" amplifier terminates in a transformer the ratio of which is arranged

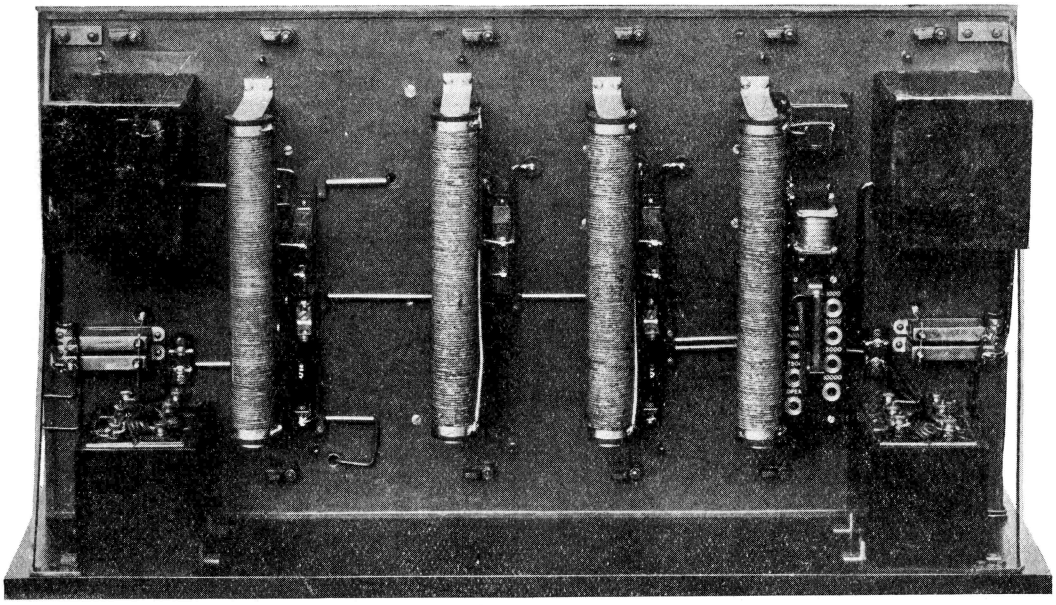

Fig. 7. A back view of the "A" amplifier with covers removed.

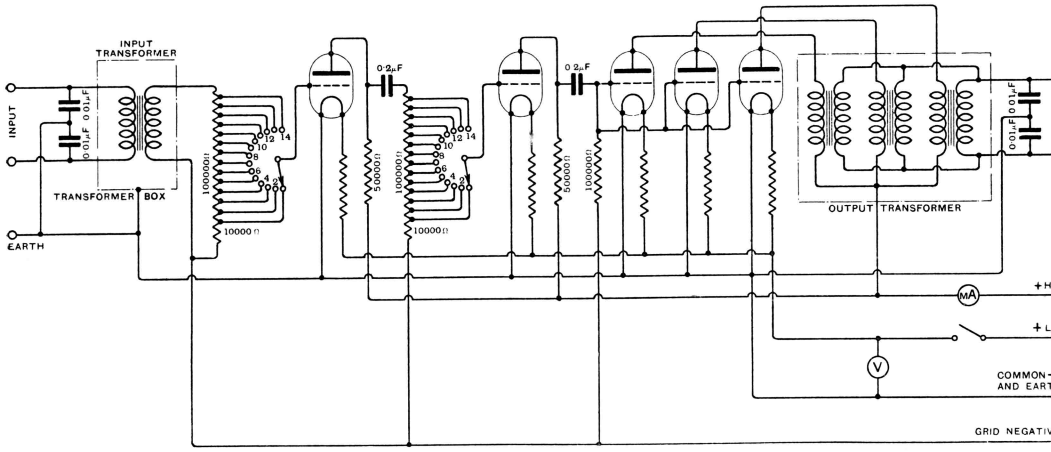

Fig. 8. Diagram of connections of the " B " amplifier.

to give the correct terminal connection for a 400-ohm line.

Fig. 3 is a full diagram of connections, and Fig. 4 is a partial diagram, showing the shielding system employed to prevent both reaction and induction.

Figs. 5, 6 and 7 are photographs of this instrument.

The " B " amplifier is chiefly a control amplifier. Two potentiometers arranged to work smoothly and to produce no electrical noise, enable it to be altered in strength from less than the incoming signals to about sixty times their strength.

Three output valves in parallel are used to give a great margin so that under no circumstances can this amplifier blast until the transmitter is very much overloaded. All possible blast is thus removed to the transmitter.

The curious arrangement of transformers in parallel at the end is an accident of design

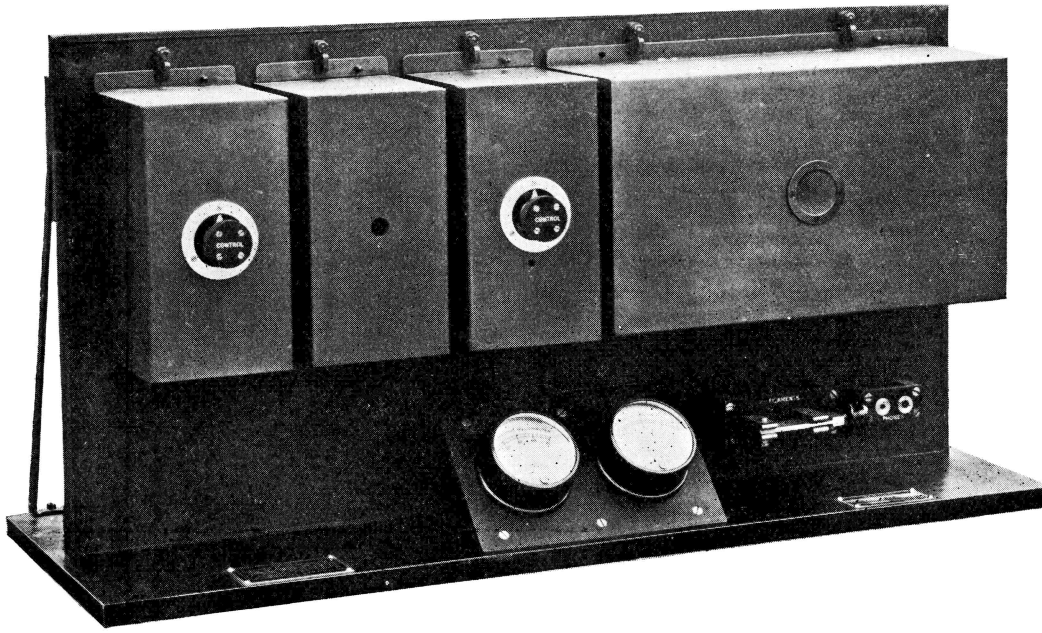

Fig. 9. The " B " amplifier (front view).

in that the properties of these transformers were thoroughly known so that it was considered preferable to use them rather than spend a lot of time investigating a bigger one.

Again, the output terminal conditions are arranged for a 400-ohm line.

The input transformer is also arranged for this condition. A transformer for the wireless set is arranged to connect with the line. With a long line it is advisable to shunt this transformer with the correct shunt but on a very short line the shunt is not absolutely necessary, and when the " B " amplifier is used in connection with a power amplifier for the loud speakers this shunt is not used.

Similarly, the shunt on the input transformer of the " B " amplifier need not be used if the link to the " A " is a short one.

Fig. 8 is the ordinary diagram of connections of the " B " amplifier. Fig. 9 is the front view (closed) of the " B." Fig. 10 is the same instrument with the covers removed.

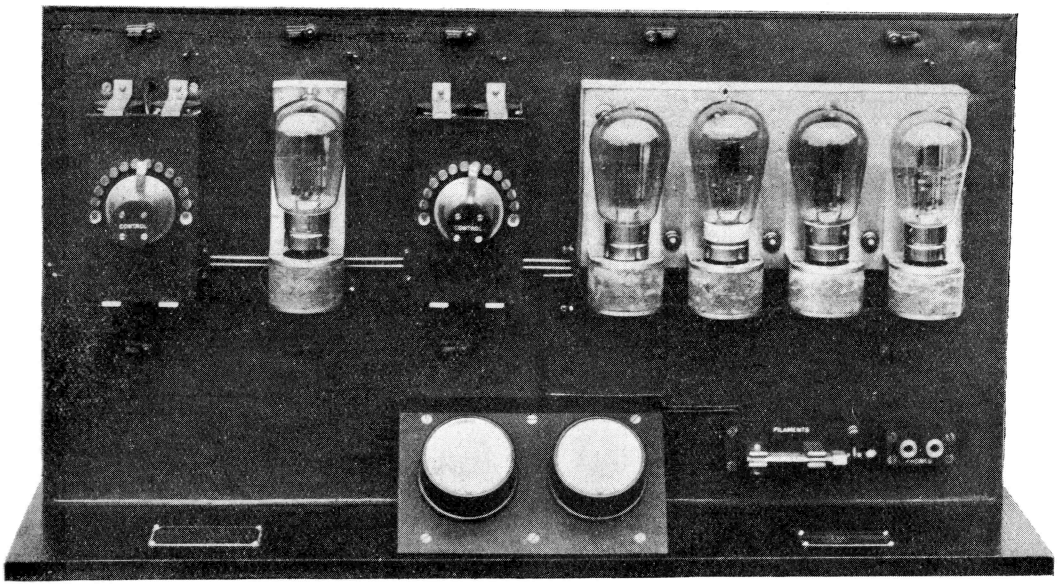

Fig. 10. The front of the " B " amplifier with covers removed

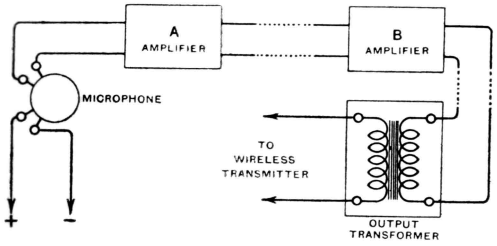

Fig. 11. A diagram showing the general arrangement of the magnetophone with its associated amplifiers connected to a broadcast transmitter.

Fig. 11 indicates how the magnetophone is coupled up to the broadcast transmitter through the complete system.

All the transformers used are of the " Ideal " type, investigated and developed by Mr. P. W. Willans, of the Marconi Company, and it is certainly a tribute to their aperiodicity over the whole frequency range that the London broadcast is transmitted through five of the transformers in cascade before reaching the high frequency transmitter.

I should, however, prefer to reduce this number if it were possible, but one has had to meet the engineering requirements.