BBC ENGINEERING TRAINING MANUAL

MICROPHONES

By the Staff of the
Engineering Training Department
British Broadcasting Corporation

A "WIRELESS WORLD" PUBLICATION

CHAPTER 6

STUDIO MICROPHONES

6.1 BBC-MARCONI RIBBON MICROPHONE

6.1.1 General Description

This is a high-grade microphone with a wide frequency range, designed for high-quality broadcasting from a studio; it is an example of differential-pressure operation of a mass-controlled system.

An extremely thin ribbon of beaten aluminium foil (approximately ·00003 in thick) supported at its ends is suspended in a strong field of a permanent magnet system, and is exposed to sound waves at both sides. The length of the ribbon is approximately 2½ in. and there are very shallow corrugations (concertina-fashion) at right angles to the length. The corrugations facilitate a smooth adjustment of the tension of the ribbon. The clamping and tensioning arrangements at the ends of the ribbon can be seen in Fig. 37, together with the pole-pieces which distribute the magnetic flux uniformly in the plane of the ribbon and at right angles to its length.

Since the length of the ribbon and the magnetic flux-density are constants, the generated e.m.f. is proportional to velocity. Though the generated e.m.f. is independent of the ribbon material, the electrical resistance of the ribbon determines the necessary turns ratio for the matching transformer. The voltage delivered to the output load is proportional to the transformer turns ratio and therefore:—

Output Voltage $\propto \sqrt{\left(\frac{Z_2}{Z_1}\right)}$ where Z_2 is the output circuit impedance and Z_1 is the ribbon impedance.

It follows that, for a given value of the impedance Z_2, the sensitivity is proportional to $1/\sqrt{Z_1}$ and it is an advantage to have the ribbon impedance as low as possible.

Aluminium is used for the ribbon because its resistance for a given mass is lower than that of any other suitable material. The latest type of ribbon, which is termed *x-foil*, has an impedance which is virtually a pure resistance of approximately 0·6 ohm.

The corrugations of the ribbon give it freedom to vibrate in the manner of a piano string, in a plane at right angles to the surface. There is thus a possibility of harmonic modes of vibration at multiples of the fundamental ribbon resonance, but this is of little

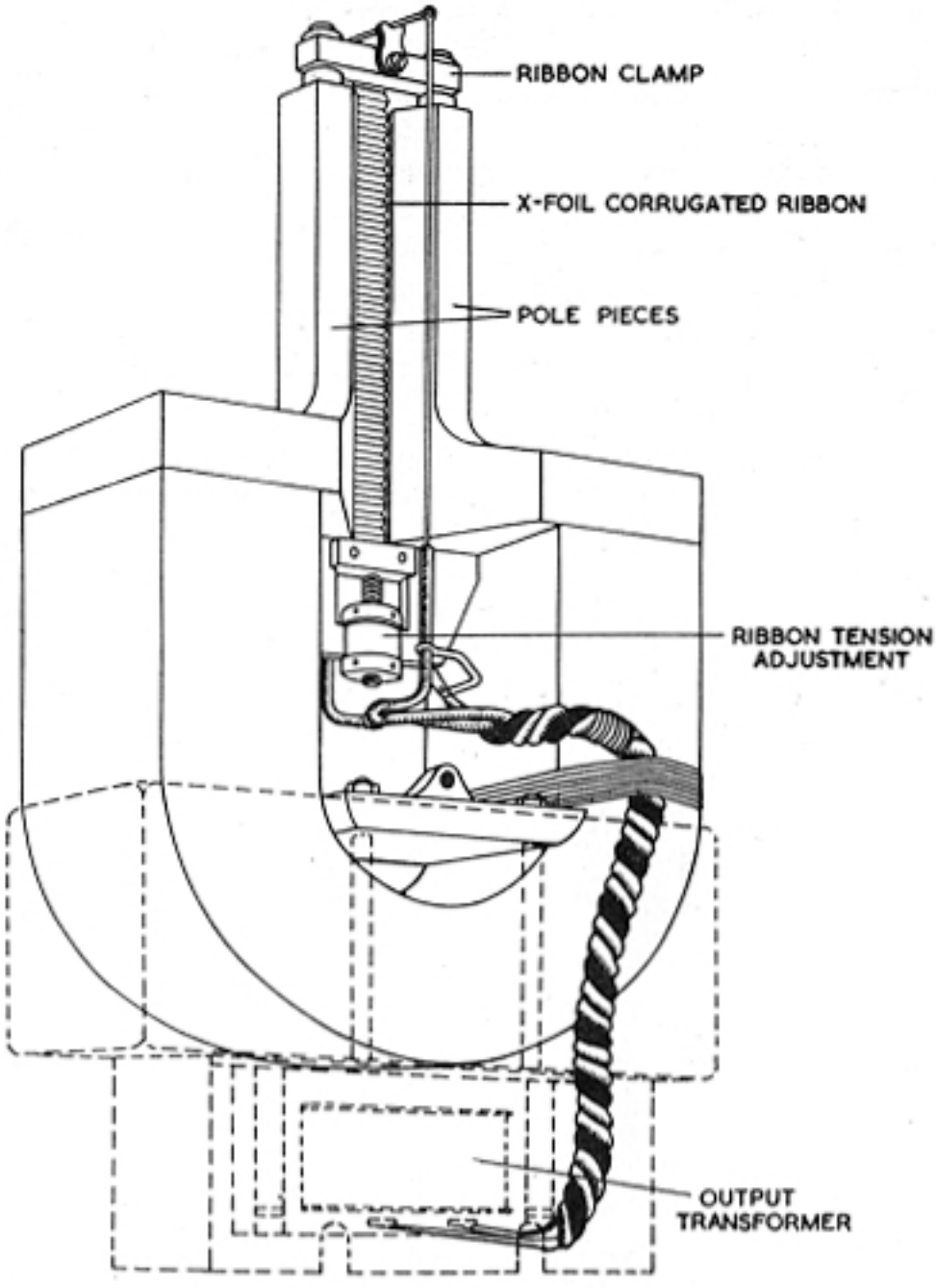

Fig. 37—BBC-MARCONI RIBBON MICROPHONE

consequence because the resonance occurs at a very low frequency and is heavily damped.*

6.1.2 Mechanical Impedance

The mass of the ribbon together with that of the air load upon it (mass of air driven by the ribbon) is of the order of 0·0025 gram. Because the tension of the ribbon is so very small, compliance is

* With some ribbon microphones that have been made in America, the ribbon has a different form, the corrugation being confined to the end portions and the centre portion stiffened to ensure a more piston-like motion, free from harmonic modes.

large and compliance reactance at frequencies higher than a few cycles per second is negligible. The fundamental resonance occurs at approximately 2 c/s, but the effect is inappreciable because of mechanical resistance caused by friction and electromagnetic damping. Resistance forms an appreciable part of the mechanical impedance at frequencies up to approximately 100 c/s, but for higher frequencies the movement is essentially mass-controlled. It is usually assumed that the system is mass-controlled throughout the audio-frequency range.

6.1.3 Driving Force

With a mass-controlled system (impedance ωm) the driving force is required to be proportional to frequency if the output is to be independent of frequency. The force acting on the ribbon is proportional to the area of the ribbon and to the differential pressure, which is the vector difference of the alternating pressures at the front and rear surfaces. Apart from differences of phase between the front and rear pressures, large differences in their magnitude are also produced at high frequencies due to diffraction.

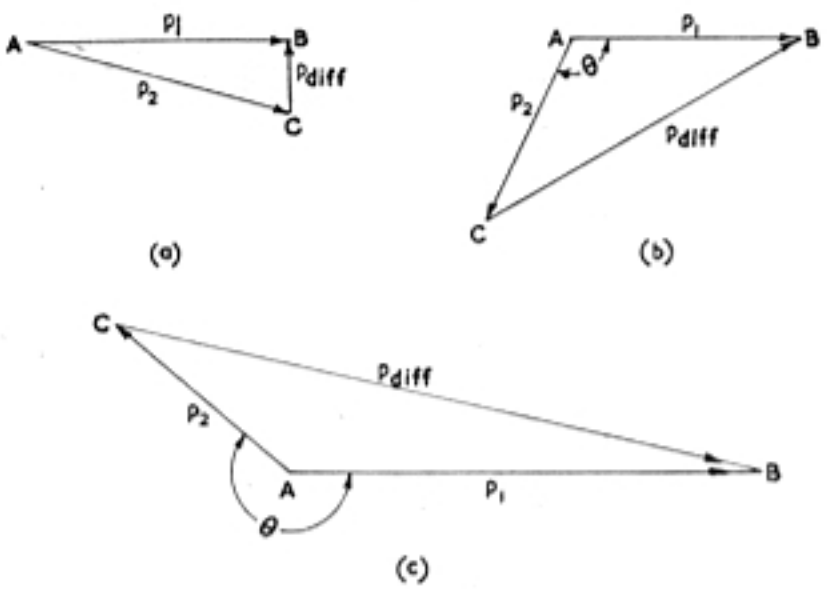

Fig. 38—BBC-MARCONI RIBBON MICROPHONE: DRIVING-FORCE VECTORS

(a) Low frequency; (b) Medium frequency; (c) High frequency

p_1 = Front pressure
p_2 = Rear pressure

Fig. 38 (a) shows the conditions at low frequency. The pressure at the front of the ribbon is represented by p_1 and the pressure on the rear face by p_2. These pressures are equal in magnitude and differ only in phase for diffraction effects are negligible. At medium frequencies there is little change in the value of p_1, and p_2 now lags

by a much larger angle as shown in Fig. 38 (b). The driving force p_{diff} has increased considerably, the increase being approximately proportional to frequency. At high frequencies the angle of lag (Fig. 38 (c)) is large and the driving force p_{diff} would be smaller than at medium frequencies if it were not for diffraction which increases the frontal pressure p_1 to two or even three times free-space pressure. Thus the driving force remains substantially proportional to frequency over the working range of the microphone.

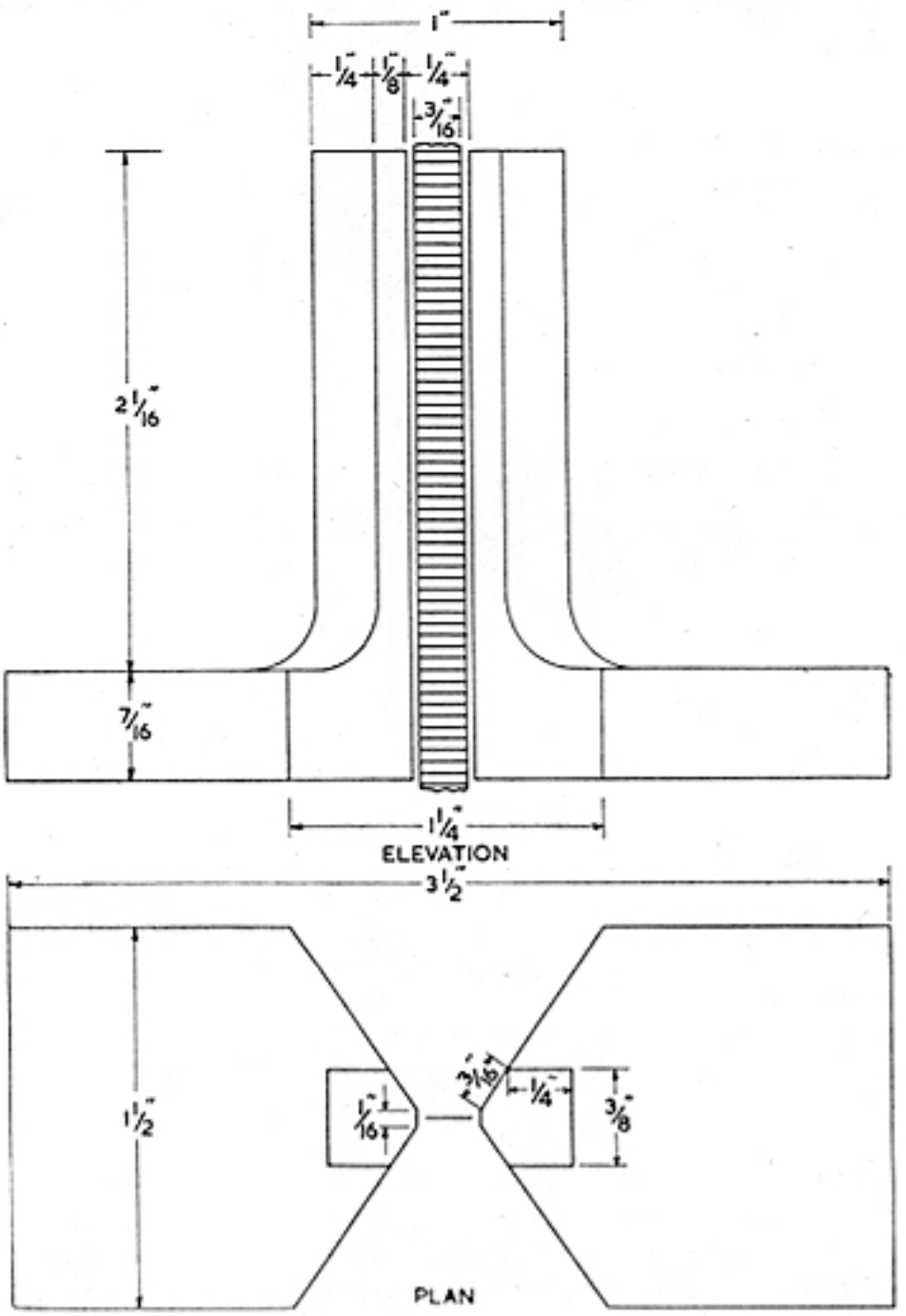

Fig. 39—BBC-MARCONI RIBBON MICROPHONE: POLE-PIECES AND RIBBON

The differential pressure for any condition is given by solution of the triangle ABC, thus:—

$$\textit{Differential Pressure} = p_{diff} = \sqrt{(A^2 + B^2 - 2AB\cos\theta)} \quad .. \quad .. \quad (1)$$

6.1.4 Calculated Response

The pole-pieces and ribbon are represented in full scale, with approximate dimensions in Fig. 39. The differential pressure on the ribbon and the performance of the microphone may be computed for plane waves at normal incidence.

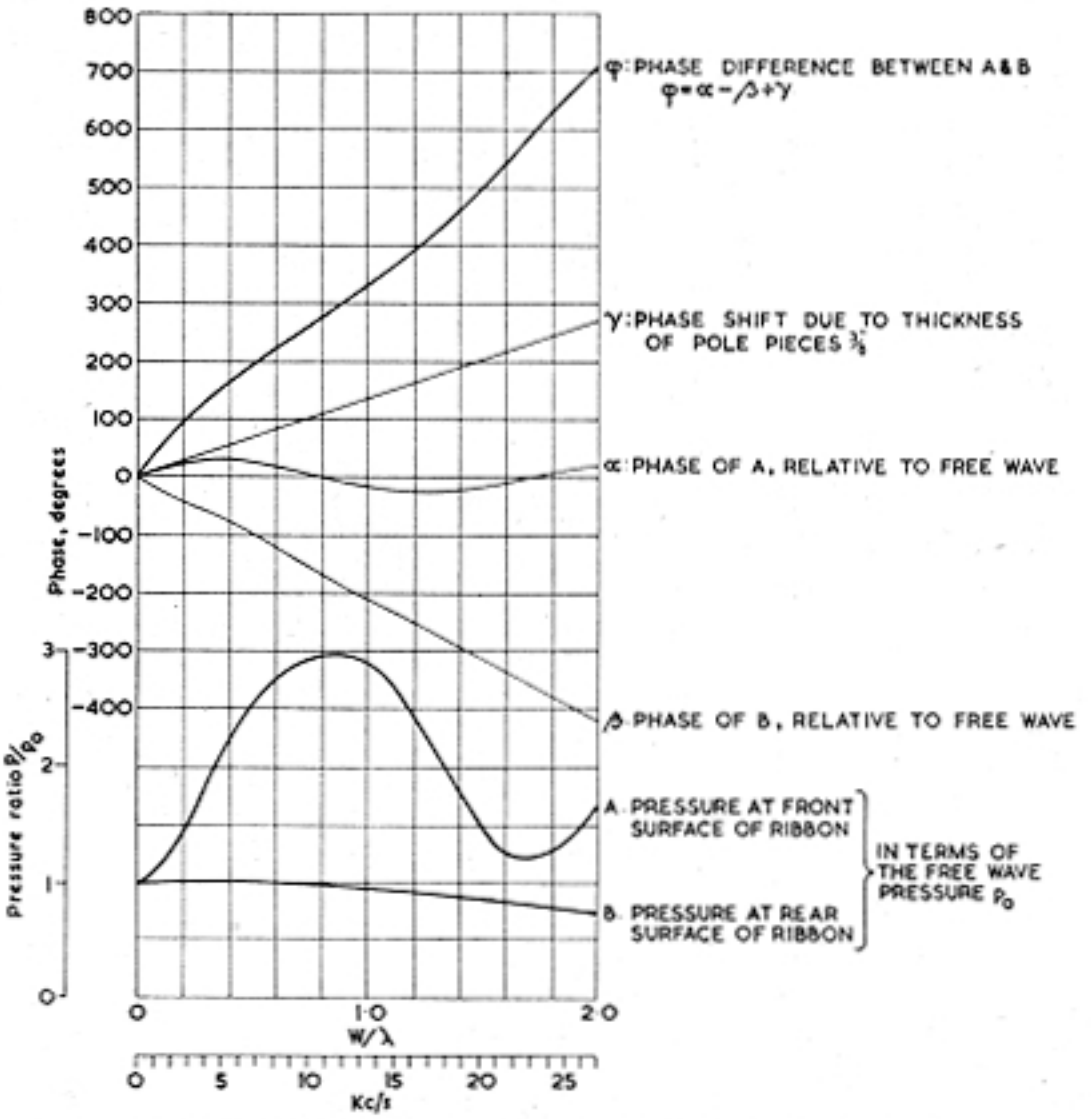

Fig. 40—MAGNITUDE AND PHASE OF PRESSURES

To illustrate the method of calculation we will assume that the diffraction effects around the rectangular frontal area of the microphone are the same as those produced by a solid square obstruction one inch wide. This conveniently neglects the effect of the cavities at front and rear, and other complications, but gives reasonable results which indicate the steps in computing the output voltage.

The shortest distance from the centre of one ribbon surface around the pole-piece to the other centre is 1·5 in.; at the lowest frequencies the phase difference corresponds to this dimension and is given by $2\pi d/\lambda$ radians, where $d=1{\cdot}5$ in.

The computed diffraction data are shown in Fig. 40, with a frequency scale included corresponding to a width W of 1 in. It should be noted that the front and rear pressures are only equal at frequencies approaching zero; although the pressure at the front

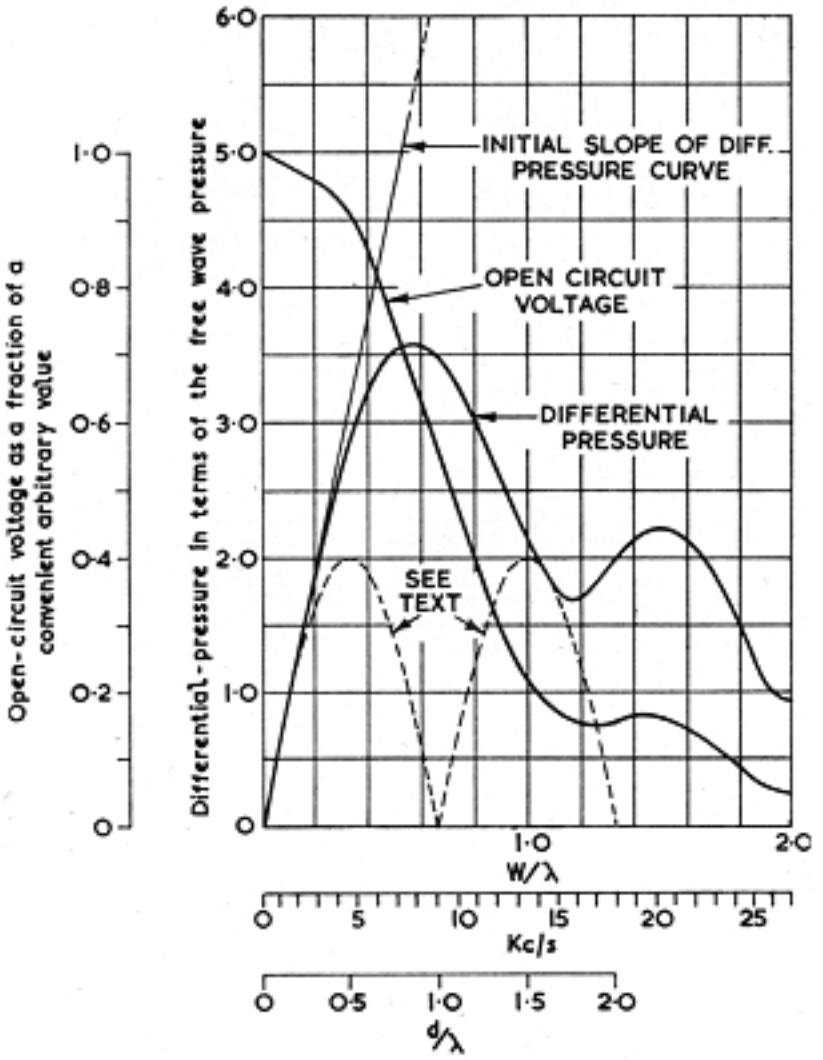

Fig. 41—COMPUTED CHARACTERISTICS OF DIFFERENTIAL PRESSURE AND OPEN-CIRCUIT VOLTAGE

decreases above $W/\lambda=1$, the minimum value which occurs at $W/\lambda=1{\cdot}7$ is not as low as the pressure at the rear. The phase difference at $W/\lambda=1{\cdot}7$ is approximately 600 degrees, so that the differential pressure would not be zero even if the front and rear pressures were equal.

At $W/\lambda=1{\cdot}1$ the phase difference is 360 degrees but the pressures are very dissimilar; the combined effect of the pressure and phase characteristics is such that there is no "extinction frequency."

To obtain the differential pressure characteristic, the data of Fig. 40 for various values of W/λ are substituted for A, B and θ in the expression $p_{diff}=\sqrt{(A^2+B^2-2AB\cos\theta)}$. The resulting characteristic is shown in Fig. 41, together with a dotted characteristic and scale of d/λ, included to show how much smaller and more erratic the differential pressure would be if it were not for the diffraction effects.

For frequencies near to zero, the front and rear pressures are both equal to p_o, while the phase difference is equal to $2\pi d/\lambda$. Substituting accordingly in Equation 1 gives $p_{diff}=2p_o \sin \pi d/\lambda$ and the slope of the curve at low frequencies, obtained by differentiating with respect of d/λ, is given by $2\pi p_o \cos \pi d/\lambda$. Thus at zero

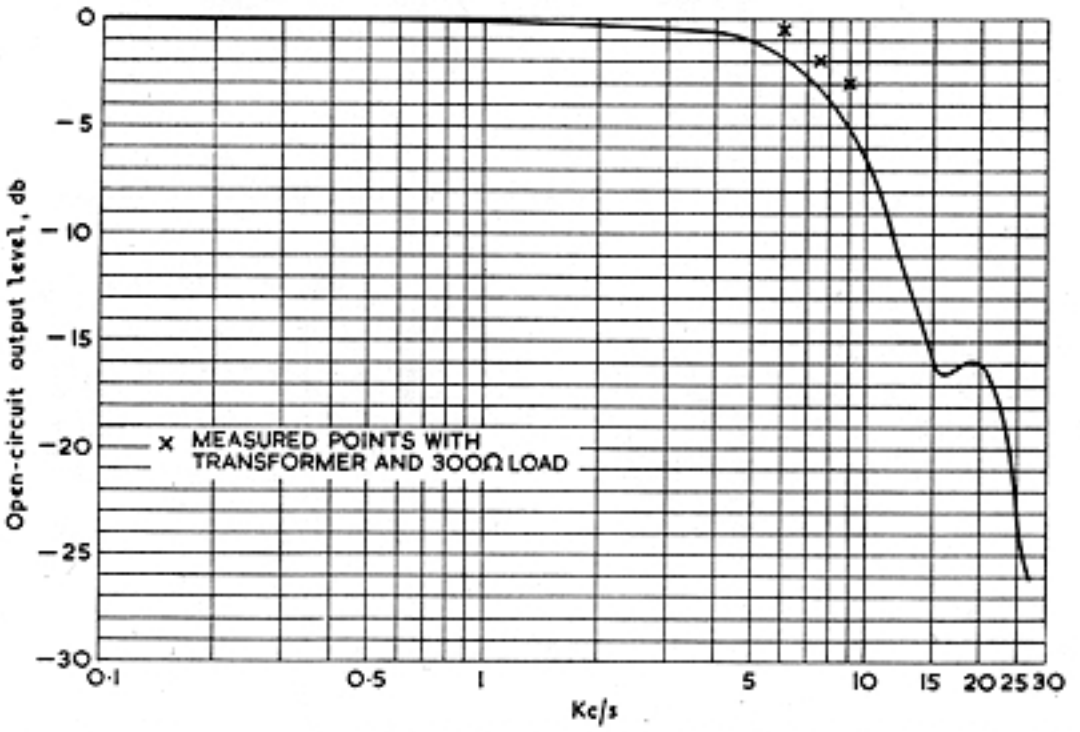

Fig. 42—COMPUTED RESPONSE/FREQUENCY CHARACTERISTICS FOR PLANE-WAVE CONDITIONS

frequency the slope is $2\pi p_o$; the straight line in Fig. 41 is drawn with this slope and shows how the differential pressure should increase with frequency to maintain a constant output voltage (on the assumption of a purely mass-controlled system).

The divergence of the differential pressure curve away from the straight line, expressed in a fractional manner, gives the fractional divergence of the open-circuit voltage away from the low-frequency reference level. Thus, for example, at the condition $W/\lambda=0{\cdot}6$ an ordinate drawn to the straight line has a height of 5·7, but the differential pressure is only 3·6, giving a ratio of 0·63 for the relative output voltage. It is not necessary to use this graphical method of obtaining the response characteristic, because the height of any

ordinate to the straight-line curve is equal to $2\pi p_o d/\lambda$ and the relative output voltage may therefore be calculated from the expression:—

$$\textit{Open-circuit Voltage}\ \frac{\sqrt{(A^2+B^2-2AB\cos\theta)}}{2\pi d/\lambda} \quad .. \quad .. \quad (2)$$

Since W is 1 in and d is 1·5 in, the ratio d/λ may be replaced by $1{\cdot}5W/\lambda$ and the expression becomes:—

$$\textit{Open-circuit Voltage}\ \frac{\sqrt{(A^2+B^2-2AB\cos\theta)}}{3\pi W/\lambda} \quad .. \quad .. \quad (3)$$

The open-circuit voltage characteristic, calculated in this way, is shown in Fig. 41, and is represented with the more usual decibel and logarithmic frequency scales in Fig. 42.

In practice, it is found that the measured response differs very little from the computed curve for frequencies between 1,000 c/s and 10,000 c/s, and it is reasonable to assume that this holds for higher frequencies.

Below 100 c/s there is an appreciable reduction of output with reduction of frequency and this may be explained by the fact that the mechanical impedance does not decrease quite in proportion to the reduction of frequency, owing to the friction and magnetic damping; there is also the effect of the reduced shunt reactance of the coupling transformer. At frequencies below approximately 10 c/s there may be some recovery of the output because of the approach towards the frequency of resonance of the ribbon.

6.1.5 Calculation of Output Voltage

The actual value of the output voltage may be calculated from the knowledge of the differential pressure and the constants of the system.

Thus, for the open-circuit ribbon voltage,

$$V = Blv \times 10^{-8} \text{ volts}$$

where B is the flux-density in the air-gap, stated to be approximately 3,200 lines per sq cm;
l is the effective length of the ribbon, approximately 6·35 cm;
and v is the velocity, in cms/sec.

The velocity is given by:—

$$v = \frac{\textit{force}}{\textit{impedance}} = \frac{A.p_{diff}}{\omega m}$$

where A is the area of the ribbon, approximately 3 sq cm;
p_{diff} is the differential pressure;
and ωm is the impedance of the mass-controlled movement.

At a frequency of 2,700 c/s the ratio W/λ is 0·2 and the differential pressure (Fig. 41) is equal to $1{\cdot}8p_o$. Assuming the total effective

mass to be 0·0025 gramme, the ribbon velocity for a sound wave of r.m.s. pressure 1 dyne per sq cm may be written:—

$$v=\frac{3\times 1\cdot 8}{2\pi\times 2700\times 0\cdot 0025}$$

$$=\frac{1}{2\cdot 5\pi}\text{ cms per sec}$$

Then $Blv=\frac{3200\times 6\cdot 35}{2\cdot 5\pi}\times 10^{-8}$ volts

$=26$ microvolts

The coupling of the ribbon to the 300-ohm output circuit terminates the ribbon with an impedance equal to its own (0·6 ohm) and the voltage into the transformer becomes 13 μV. The voltage delivered from the secondary winding to the load is given by:—

$$v_{sec}=\frac{300}{0\cdot 6}\times 13\ \mu\text{V}$$

$$=290\ \mu\text{V}$$

This output voltage of 0·000290 corresponds closely to a level of −70 db with respect to 1 volt; this is in close agreement with the reputed output level of the microphone of approximately −68 db for a sound wave of r.m.s. pressure 1 dyne per sq cm.

6.1.6 Working Distance and Polar Diagram

As has been explained, for all differential-pressure operated microphones the response to sounds of low frequency is much greater if the waves are spherical than if they are plane. Most of the sound sources in a studio are of sufficiently small dimensions to produce sound waves which at short distances are not plane. It is therefore necessary to have a reasonably large distance separating the ribbon microphone from the nearest sound source, in order to avoid an excessive bass response. The microphone should never be used at a distance less than approximately two feet.

The polar diagram for the horizontal plane is a figure-of-eight loop, almost identical with that of Fig. 34 throughout the major part of the audio-frequency range. At the highest frequencies diffraction variations cause some distortion of the shape of the loop.

The polar diagram for the vertical plane is also a loop similar to that of Fig. 34, but distortion occurs at a somewhat lower frequency than for the horizontal plane because, owing to the length of the ribbon, the phase-difference effect becomes appreciable at frequencies of 6,000 c/s and over.

The response/frequency characteristic of this microphone is sufficiently independent of the angle of incidence to ensure reasonable preservation of the tone relationships in a sound field.

6.2 S. T. & C. MOVING-COIL MICROPHONE 4017

6.2.1 General Description

This microphone has been used extensively by the BBC for a number of years, particularly on outside broadcasts. It incorporates the principle of pressure operation of a constant-impedance system discussed on page 43. The microphone was designed to produce a uniform response over a wide frequency range and the velocity of the moving system for a constant driving force is substantially independent of frequency over a range of 35–10,000 c/s.

The construction is shown in Fig. 43; the general shape of the microphone is cylindrical with an overall diameter of approximately

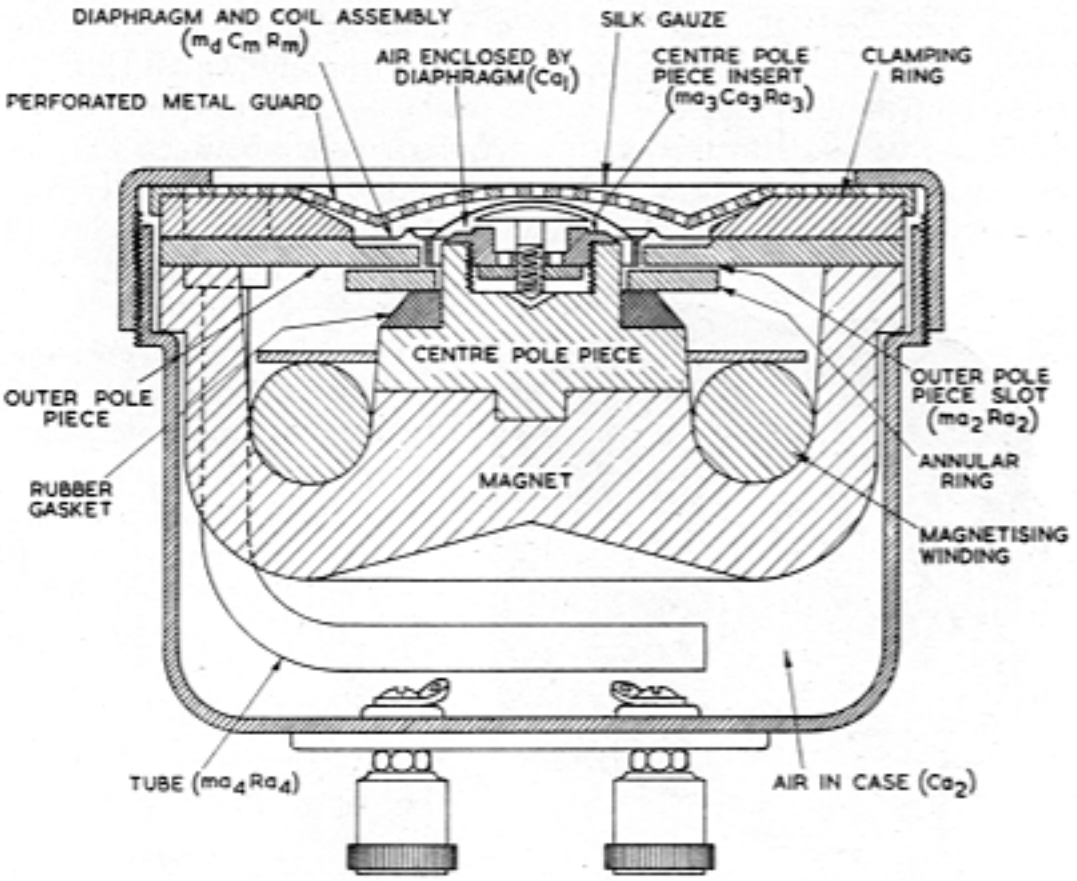

Fig. 43—S. T. & C. MICROPHONE 4017C: CONSTRUCTION

3¼ inches. The diaphragm is of thin duralumin, for lightness, domed for rigidity to ensure a piston-like motion, free from harmonic modes. The domed centre portion, which is the active part of the diaphragm, has a diameter of approximately one inch; the outer portion of the diaphragm has concentric circular corrugations which form a flexible mounting.

The moving coil, which is attached to the underside of the dome, is of aluminium ribbon, wound on edge and secured and insulated with phenol varnish. The diameter of the coil is approximately

equal to that of the domed portion of the diaphragm, to which it is bonded with varnish by a high-temperature baking process.

A perforated steel guard protects the diaphragm from accidental damage in handling and prevents objects attracted by the strong magnetic flux from impinging on the diaphragm; the steel guard is covered by a silk screen which serves to exclude dust, iron particles and other foreign matter.

The centre pole-piece of the magnet system is welded to the permanent magnet, which is of cobalt steel and has a large flux with a high degree of permanence; the magnetising winding is left in position as shown in Fig. 43.

A recessed insert is screwed into the centre pole-piece, the recess being immediately under the large round head of an adjusting screw; the head is suitably domed to correspond with the inner surface of the diaphragm. By movement of the screw, an adjustment can be made to the narrow annular passage between the rim of the insert and the head of the screw; this passage connects the cylindrical cavity below the screw head with the small enclosure between diaphragm and pole-pieces.

There is a restricted passage for air particles from the front of the pole-pieces to the rear, via the magnetic air-gap and a much narrower annular slot; this slot is formed between the underside of the outer pole-piece and an annular ring, spaced from the pole-piece by a shim. The space between the ring and the centre

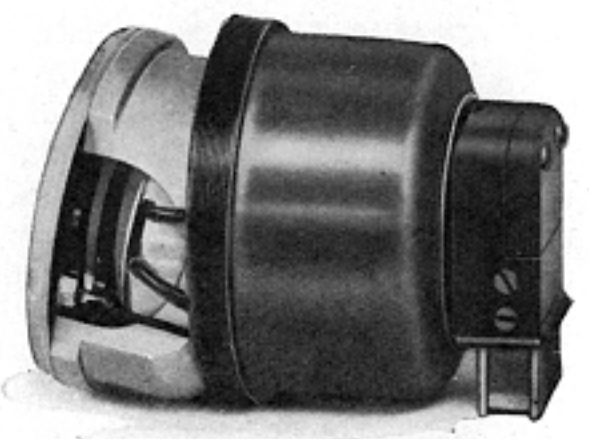

Fig. 44—S. T. & C. MICROPHONE 4017A

(*Above*) With front screen and guard removed. (*Right*) Casing removed to show cut-away shape of magnet

pole-piece is sealed by a rubber gasket (shown cross-hatched in Fig. 43).

The clamping ring, which holds the diaphragm against the outer pole-piece, is chamfered to minimise cavity resonance. This is shown in the photograph taken with silk screen and guard removed (Fig. 44). The lower picture, with the internal assembly partially withdrawn from the casing, shows the cut-away magnet shape, which ensures that the air behind the outer pole-piece is part of the total air volume within the casing.

The plug and socket at the rear of the 4017A microphone was found unsatisfactory in service. Later microphones, designated 4017C, are provided with terminals, as shown in Fig. 43.

Two of the terminals at the rear of the casing are connected to the moving coil, which is insulated from the rest of the microphone. A third terminal is connected to the casing which, together with the perforated guard at the front, functions as an electrical shield when the terminal is earthed.

6.2.2 Operation

The diaphragm and coil assembly has mass m_d, compliance C_{md} and resistance R_{md}, such that if no other elements were present

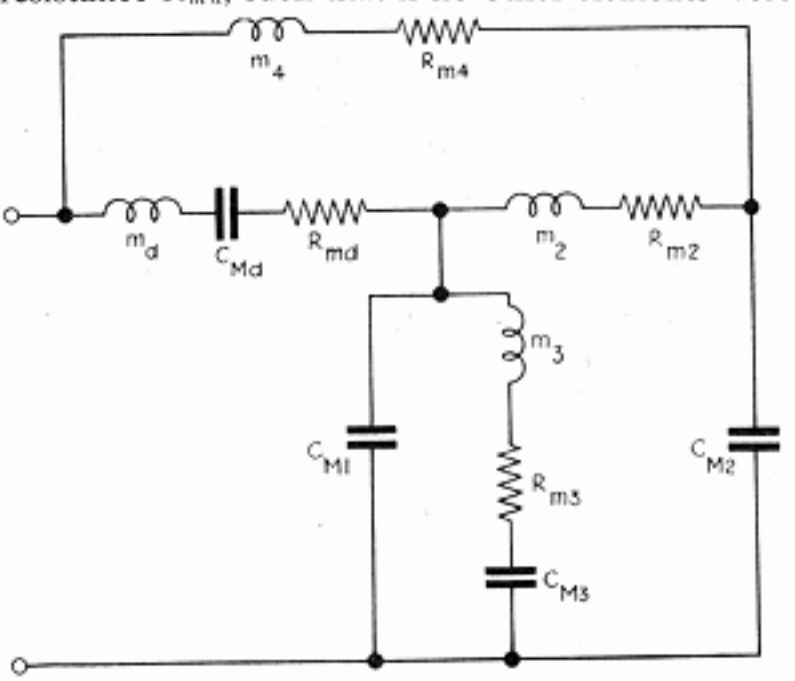

Fig. 45—S. T. & C. MICROPHONE 4017: EQUIVALENT CIRCUIT, SHOWING MECHANICAL EQUIVALENTS FOR ACOUSTICAL ELEMENTS

the velocity/frequency characteristic would have a sharp peak below 2,000 c/s. This resonance is avoided by the provision of slots and cavities behind the diaphragm; because of the acoustical impedances introduced, the velocity for a constant applied force is

reasonably uniform through the frequency range. The equivalent diagram for the composite system of acoustical and mechanical elements is shown in Fig. 45.

The main resonance of the diaphragm is smoothed out by the effect of m_2, R_{m2} and C_{m2}, which are the mechanical equivalents of the acoustical elements m_{a2}, R_{a2} and C_{a2} associated with the outer pole-piece slot and the air in the microphone casing. In the absence of the other acoustical devices, the velocity would decrease below 200 c/s, with sharp irregularities above 2,000 c/s caused by m_2, R_{m2} and C_{m2}. These deviations from a constant-velocity characteristic are shown by the dotted curves of Fig. 46 which is a

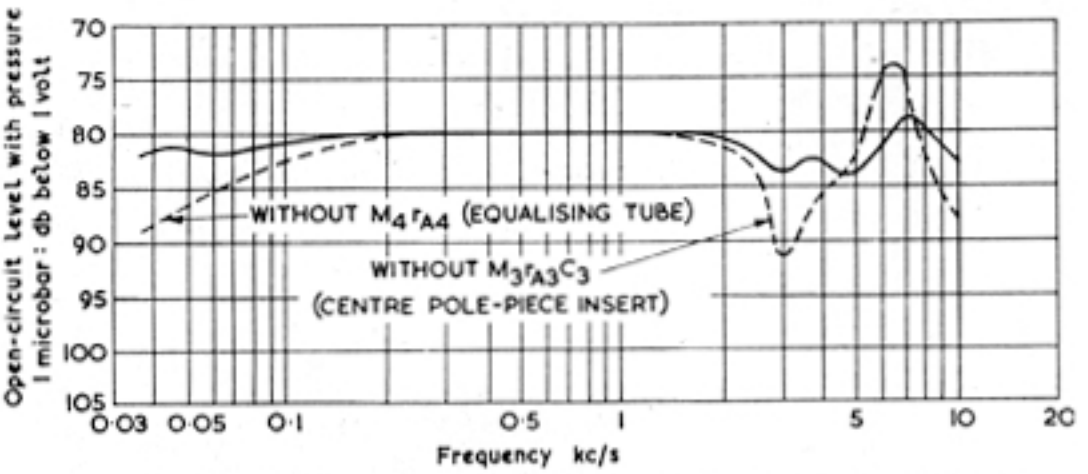

Fig. 46—S. T. & C. MICROPHONE 4017: PRESSURE/FREQUENCY CALIBRATION

graph of output for a constant applied pressure, plotted against frequency. The effect of m_3, R_{m3} and C_{m3}, due to the centre pole-piece insert, is to reduce the variations above 2,000 c/s, leaving only minor undulations as shown by the full-line curve.

The function of the tube, m_{a4} R_{a4}, is to offset the effect of the low-frequency capacitive reactance of the air in the casing, thus preventing a sharp decrease of diaphragm velocity at the lowest audio frequencies. The inertance and resistance of the tubular path are such that at frequencies above 200 c/s the volume displacement is negligible and the response of the microphone is not affected. At frequencies lower than 200 c/s there is a partial resonance between the positive reactance of the tube and the negative reactance of the casing. The acoustical resistance is comparatively small and an appreciable pressure is produced in the casing, the phase being such that the velocity of the diaphragm is augmented and the low-frequency response maintained, as shown in Fig. 46.

6.2.3 Performance

It must be emphasised that the graph of Fig. 46 represents a " pressure " calibration, which is obtained by a laboratory process involving

the application of a known pressure to the diaphragm. Information of this kind is of value in the development of a satisfactory moving system, but is not a complete indication of microphone performance because no account is taken of the diffraction and phase-difference effects.

The proper representation of microphone performance is by means of a graph showing the " field " calibration. This is obtained by measuring the output of the microphone when subjected to a sound field of constant intensity at various frequencies and angles of incidence. A field calibration for the S. T. & C. 4017 microphone is given in Fig. 47.

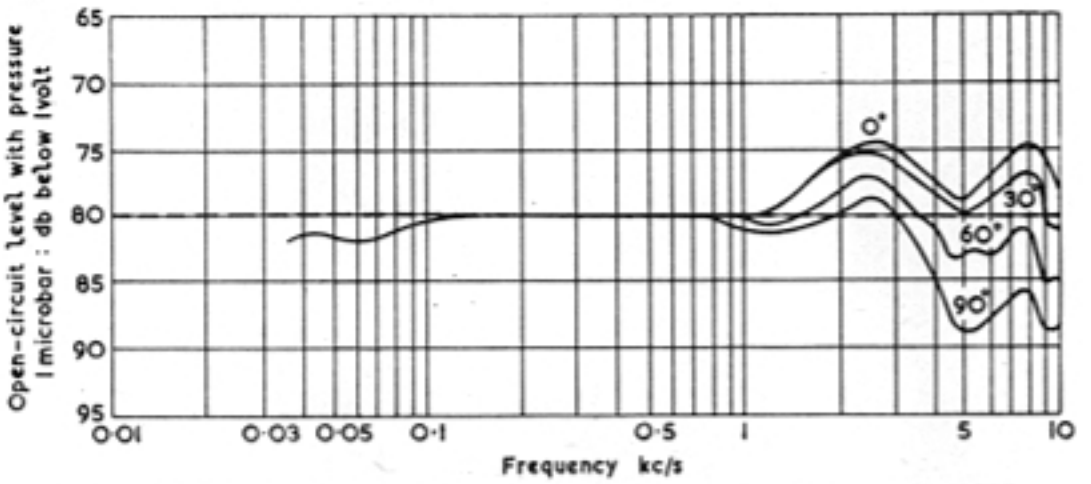

Fig. 47—S. T. & C. MICROPHONE 4017: FIELD CALIBRATION

Comparison of the field and pressure calibrations shows that although they are very similar for all frequencies below 1,000 c/s the shapes of the various field response curves for the higher frequencies differ considerably from that of the pressure response. For sound at normal incidence, the field response at frequencies between 1,000 c/s and 5,000 c/s is much greater than the pressure response. The difference is almost 10 db at 3,000 c/s, the rise in response in this part of the range being quite consistent with the microphone frontal dimension of 3¼ in. ($D/\lambda=1$ at approximately 4,000 c/s, page 51).

The electrical impedance of the microphone is almost constant at 30 ohms, from very low frequencies up to 1,000 c/s, increasing to approximately 37 ohms at 10,000 c/s.

The levels shown in Fig. 47 are the open-circuit levels of the moving-coil output. When the microphone is matched by a transformer to a 300-ohm line, there is a 6-db loss of level due to termination and a 10-db gain due to the step-up ratio of the transformer. The general level of output due to a sound field of pressure 1 bar, will, therefore, be −76 db with respect to 1 volt into 300 ohms.

6.3 S. T. & C. MOVING-COIL MICROPHONE 4021A

6.3.1 General Description

This microphone was developed about 1935, some years after the introduction of the 4017A microphone. The internal acoustical arrangements of this microphone are less elaborate and the external shape and size is chosen with due regard to diffraction effects. The frequency range is similar to that of the 4017 microphone, i.e., 35–10,000 c/s, but the response at the upper part of the range is much less dependent on the angle of incidence of the sound.

Fig. 48—S. T. & C. MICROPHONE 4021A

The microphone is designed for use with the diaphragm uppermost, as shown in Fig. 48.* This arrangement results in an equal angle of incidence for all sound in the horizontal plane (page 50) ensuring that the frequency characteristic is common for all horizontal components of the sound field. Within the frequency range there is no appreciable loss of response due to phase difference across the diaphragm, the diameter of which is less than the wavelength at all frequencies below 17,000 c/s.

6.3.2 Construction

The general construction is shown in Fig. 49. At the top of the microphone there is a disk-like screen, mounted on three small pillars so that its centre is approximately $\frac{1}{8}$ in. from perforations in the casing above the diaphragm. The screen is of silk gauze, enclosed within layers of fine wire mesh and bounded by a rigid metal rim. Its function is to equalise the response at all angles in the vertical plane; without the screen the directivity is sufficient to be objectionable, even though it is minimised by the spherical shape. The diameter of the casing is $2\frac{1}{2}$ inches.

The diaphragm is somewhat similar in construction to that of the 4017 microphone, but is much lighter because of decreased thickness and diameter. The domed central portion or diaphragm proper has a diameter of approximately $\frac{3}{4}$ in. and rigidity such that, for all frequencies below 15,000 c/s, the motion is piston-like with no tendency for harmonic modes of vibration. Surrounding the central dome there are tangential corrugations on an annular portion $\frac{1}{8}$ in. wide. This arrangement provides a flexible mounting with low mechanical resistance. The diaphragm is protected by

* From its shape it is known colloquially as the *apple and biscuit* microphone.

the perforated part of the casing, covered with a fine gauze to exclude dust and iron particles.

Below the air-gap between the pole-pieces, there is an annular gauze strip which provides acoustical resistance to the movement of air particles in the gap. The space below the gauze is filled with cotton-wool, as are the small holes in the side wall of the Alnico magnet and the outer spaces between magnet and casing. A threaded ring below the magnet clamps the diaphragm and magnet assembly firmly against a rubber gasket in the top part of the casing.

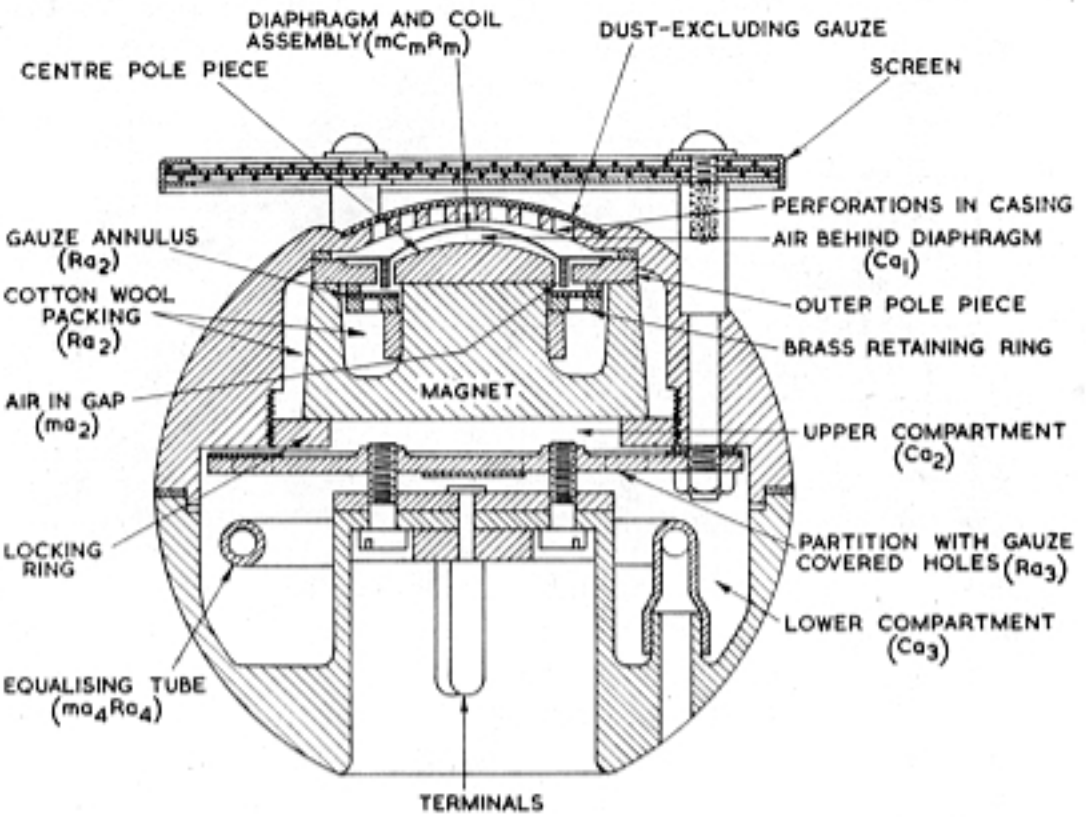

Fig. 49—S. T. & C. MICROPHONE 4021A: CONSTRUCTION

The lower part of the casing is separated from the upper part by a brass partition, with six holes covered by gauze. This functions as an acoustical resistance, damping resonances in the volume of air below the magnet.

The tube in the lower compartment serves not only to equalise internal and external pressures, but also to maintain the low-frequency response (as described for microphone S. T. & C. 4017). For the latter purpose an appreciable inertance is necessary, and this is provided by using a rubber tube, curled into the available space, and thick enough to maintain its tubular shape.

At the bottom of the microphone there is a recess with connecting pins and a securing clip, provided for the insertion of the tubular microphone stand.

6.3.3 Operation

Because of the extreme lightness of the diaphragm, the frequency of the diaphragm resonance is quite high in the audio range and its effect is made negligible by comparatively simple means. There is no resonant cavity in the centre pole-piece and no special slot below the outer pole-piece. The mechanical impedance is sufficiently uniform due to the combined effects of (i) the capacitance of air behind the diaphragm, (ii) the mass of air in the magnetic air-gap, and (iii) acoustical resistance, provided by the gauze ring below the coil and by cotton-wool in the upper part of the casing. The reactance of the equalising tube opposes that of the lower part of the casing, preventing loss at low frequencies.

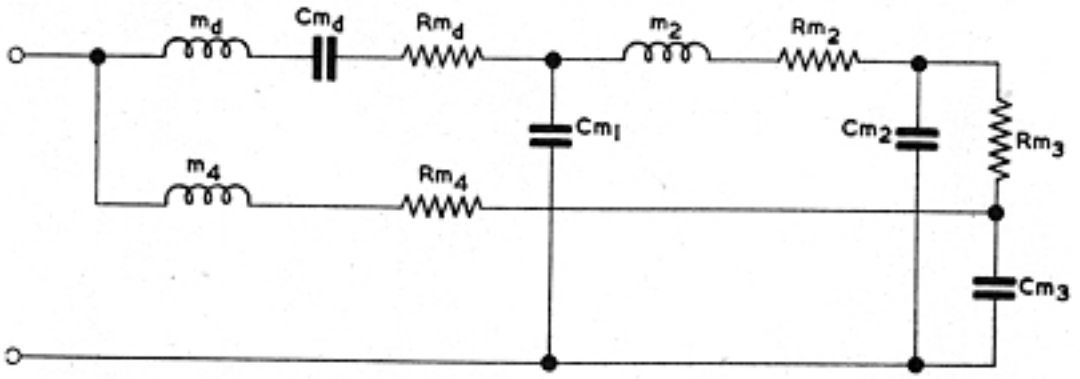

Fig. 50—S. T. & C. MICROPHONE 4021A: EQUIVALENT CIRCUIT

The equivalent circuit for the microphone is shown in Fig. 50. The branch m_4, R_{m4}, corresponding to the inertance and resistance of the tube, is shown connected between C_{m3} and the input terminal. Although the outlet of the tube is at the back of the microphone, the phase of the pressure applied to it at low frequencies is virtually the same as the phase at the diaphragm.

6.3.4 Performance

The field response is represented in Fig. 51. For horizontal waves the maximum variation of output with frequency is approximately 6 db. The variation of output with various angles of incidence in the vertical plane is approximately 6 db at 10,000 c/s and 4 db at 5,000 c/s, decreasing to zero for frequencies below 1,000 c/s. Although the shape of the response/frequency characteristic is reasonably independent of the angle of incidence, there is a slight loss of high-frequency response to sound at an oblique angle from below the microphone, as shown by the curves for $-30°$ and $-60°$.

The screen on the top of the microphone is largely responsible for the good omni-directional characteristics. Without the screen, the divergence between the curves is some 6 db greater at 5,000 c/s and 10 db more at 10,000 c/s. The equalising effect of the screen

is due to its properties of diffraction and attenuation. At frequencies below 1,000 c/s, sound at any angle has free access to the diaphragm. At the higher audio frequencies, sound impinging on the microphone from above is obstructed by the screen and there is an acoustical flow through it due to high pressure at the top surface. This controlled flow contributes to the effective diaphragm pressure, which otherwise would be rather less than the free-wave value (as for an appreciable central region at the rear of a rigid disk).

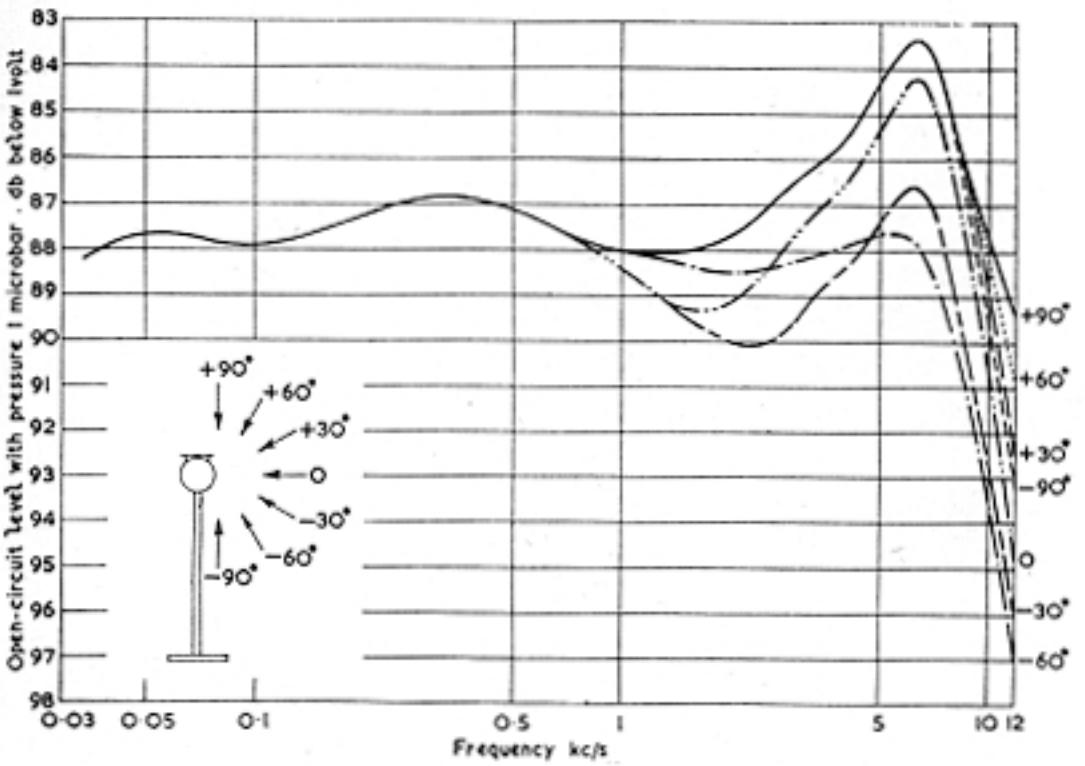

Fig. 51—S. T. & C. MICROPHONE 4021A: FIELD CALIBRATION

High-frequency sound impinging on the microphone from below is partially reflected from the screen on to the diaphragm, thus maintaining the effective diaphragm pressure despite obstruction of the direct wave by the microphone casing.

All the curves have a definite peak between 5,000 c/s and 8,000 c/s; this may be attributed to cavity resonance, the effective diameter of the cavity in front of the diaphragm being approximately 0·8 in. (circumference equal to wavelength at 5,500 c/s, page 60).

6.4 E.M.I. MOVING-COIL MICROPHONE

6.4.1 General Description

This microphone is a pressure-operated moving-coil instrument and its general construction is shown in the cross-section drawing (Fig. 52).